Data sheet for BEVI el-motor type 3D 160 M1-2

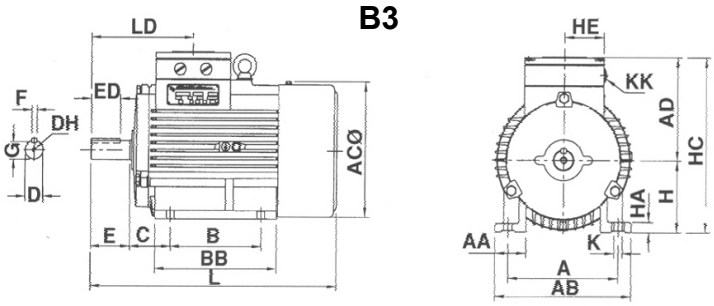

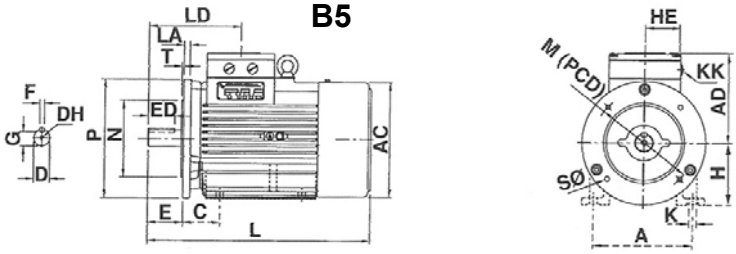

PERFORMANCE DATA

TYPE	POLE	kW	VOLTAGE	Hz	RPM	In-A	I.CL.	IP
160 M1-2	2	11	380-420	50	2930	20,2	F	55
160 M1-2	2	13,2	440-480	60	3516	21,1	F	55

	Efficiency	Power factor	Starting current	Starting torque	Breakdown torque	Moment of inertia	Weight	
TYPE	η %	Cos φ	Is / In	Cs / Cn	Cmax / Cn	INERTI kg.m2	Kg	
160 M1-2	88,4	0,89	7,5	2,2	2,3	0,0443	102	

DIMENSIONS

A	B	C	D	DH	E	F	G	H	K	L	
254	210	108	42	M16	110	12	37	160	15	620	

AB	AC	AD	HC						
320	320	285	440						

	B5 M	B5 N	B5 P	B5 S	B5 T
	300	250	350	19	5

BEARINGS

	DE	NDE	
	6309/C3	6309/C3	

We reserve our right to make changes without further notice.